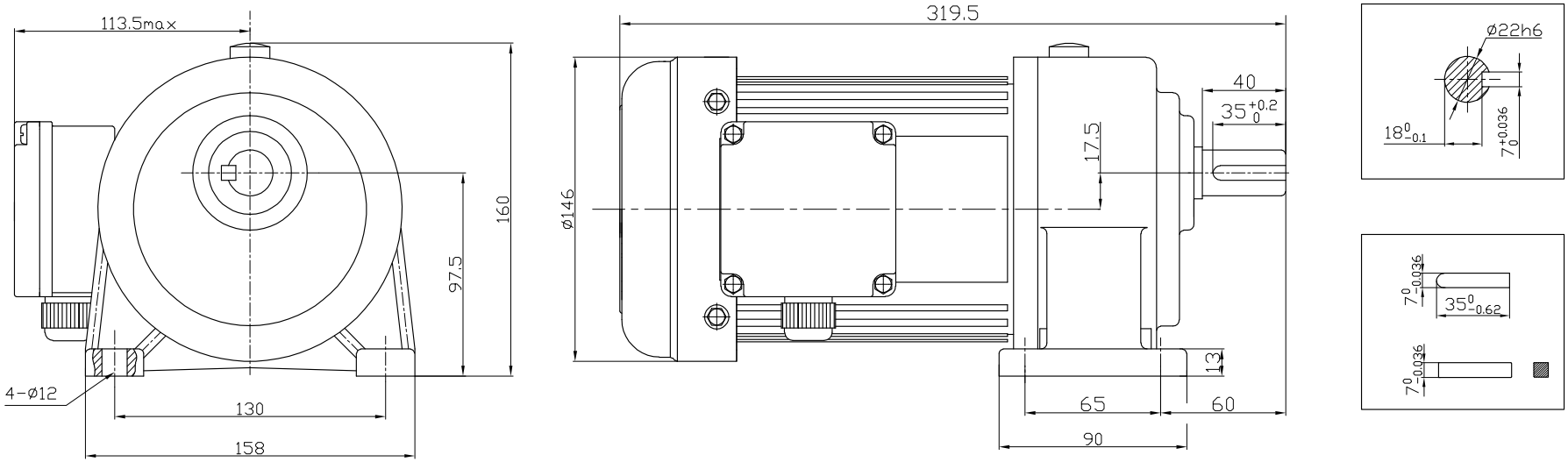
113.5max
160
97.5
4-ø12
130
158
319.5
ø146
40
35 +0.2 0
17.5
13
65
60
90
ø22h6
18 0 -0.1
7 +0.036 0
7 0 -0.036
35 0 -0.62
7 0 -0.036