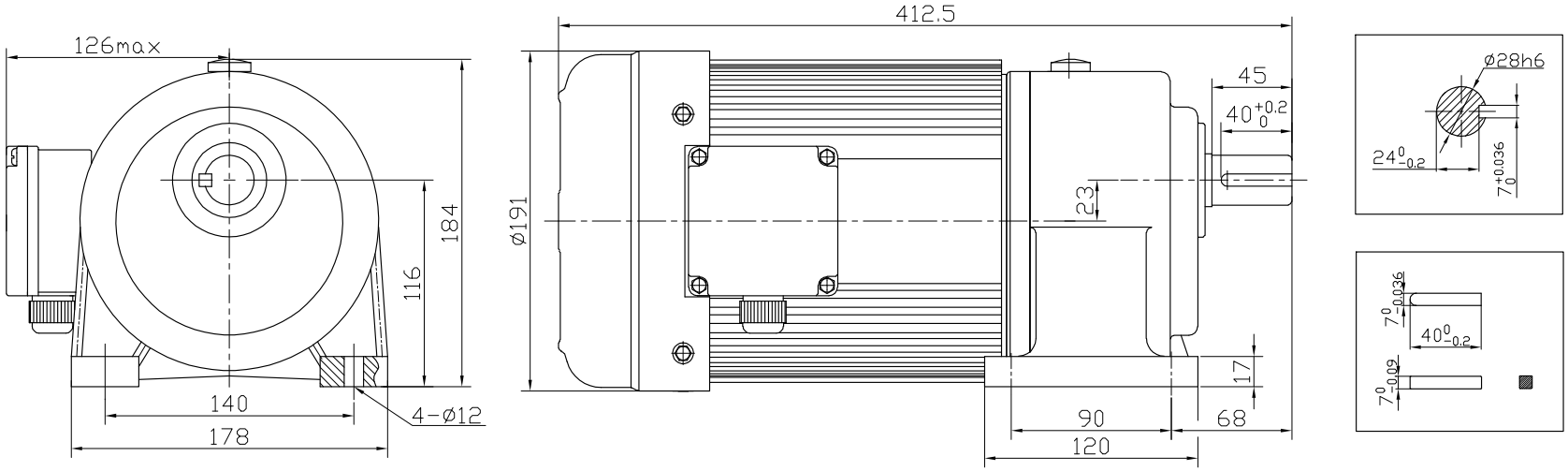
126max
184
116
140
178
4-ø12
412.5
ø191
45
40 +0.2 0
23
17
90
68
120
ø28h6
24 0 -0.2
7 +0.036 0
7 0 -0.036
40 0 -0.2
7 0 -0.09