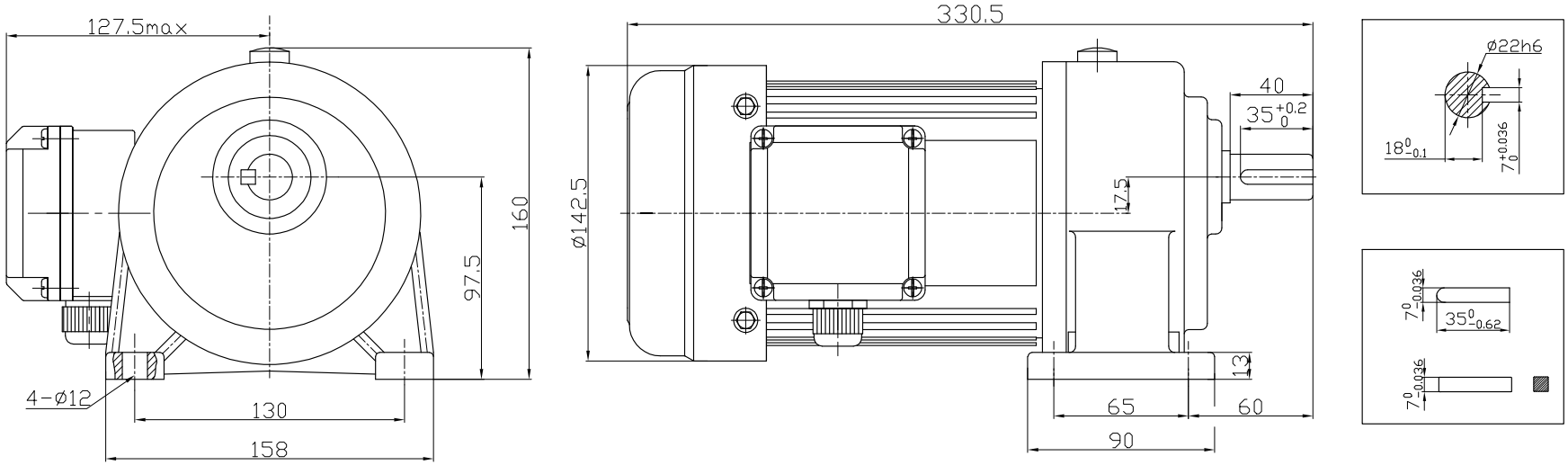
127.5max
160
97.5
4-Ø12
130
158
330.5
Ø142.5
17.5
40
35 +0.2 0
13
65
60
90
Ø22h6
18 0 -0.1
7 +0.036 0
7 0 -0.036
35 0 -0.62
7 0 -0.036