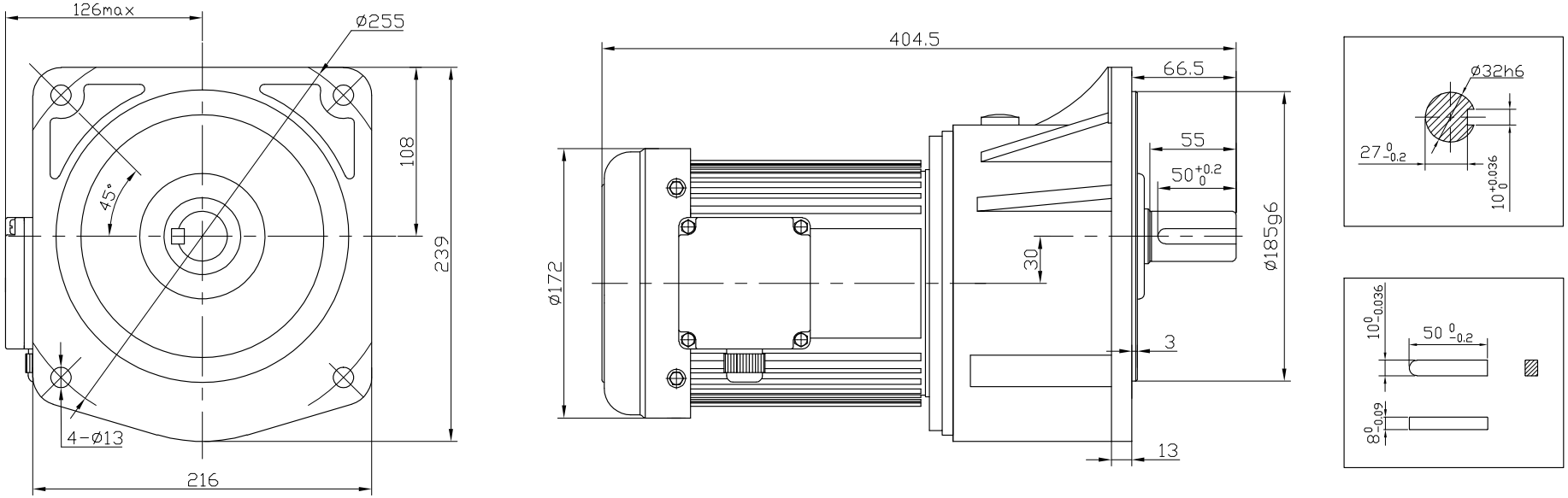
126max
ø255
108
239
45°
4-ø13
216
404.5
66.5
55
50 +0.2 0
30
ø172
ø185g6
3
13
ø32h6
27 0 -0.2
10 +0.036 0
10 0 -0.036
50 0 -0.2
8 0 -0.09