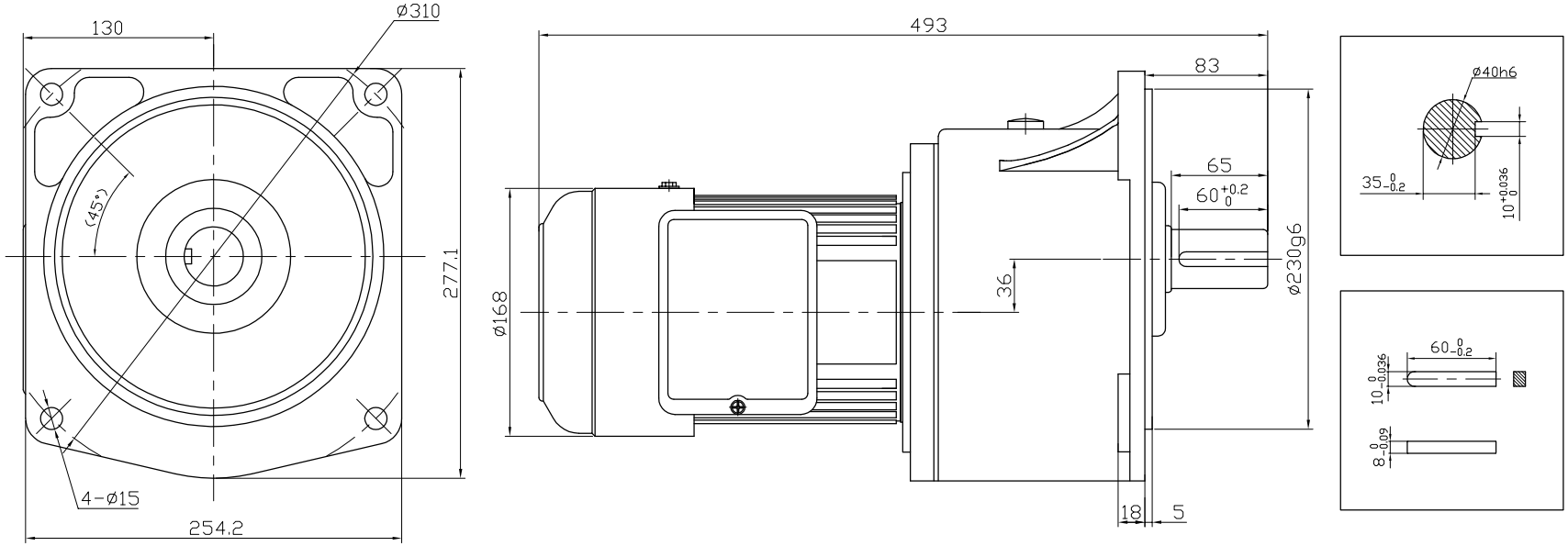
130
ø310
(45°)
277.1
4-ø15
254.2
493
83
65
60 +0.2 0
ø168
36
ø230g6
18
5
ø40h6
35 0 -0.2
10 +0.036 0
60 0 -0.2
10 0 -0.036
8 0 -0.09