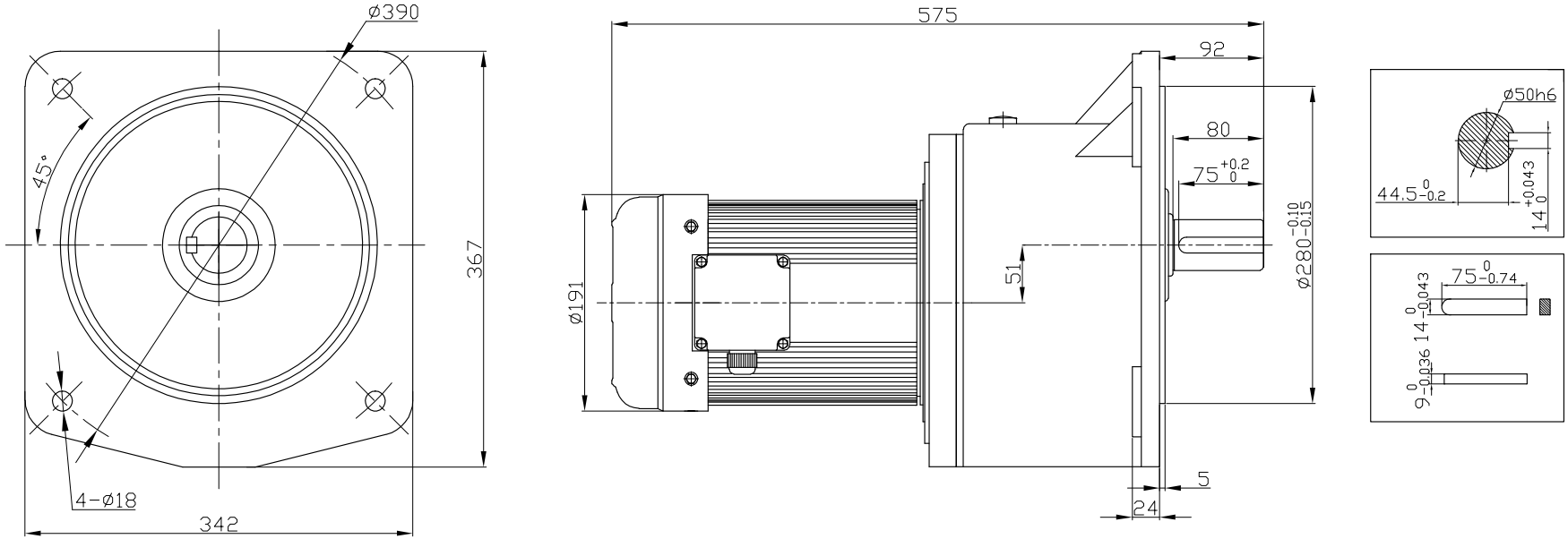
ø390
45°
367
4-ø18
342
575
92
80
75 +0.2 0
51
ø191
ø280 -0.10 -0.15
5
24
ø50h6
44.5 0 -0.2
14 +0.043 0
75 0 -0.74
14 0 -0.043
9 0 -0.036